Deep Hand Tubewell:

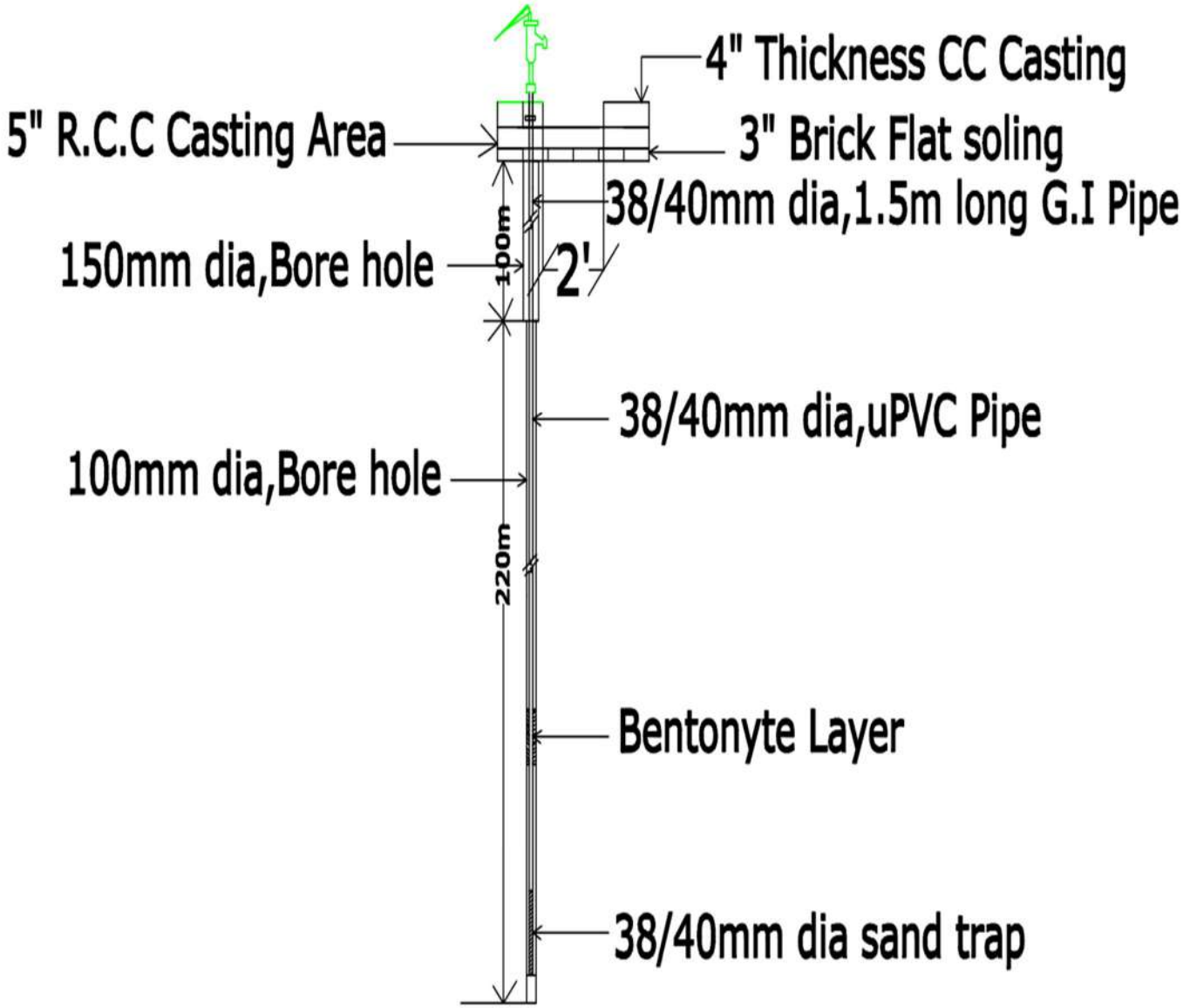

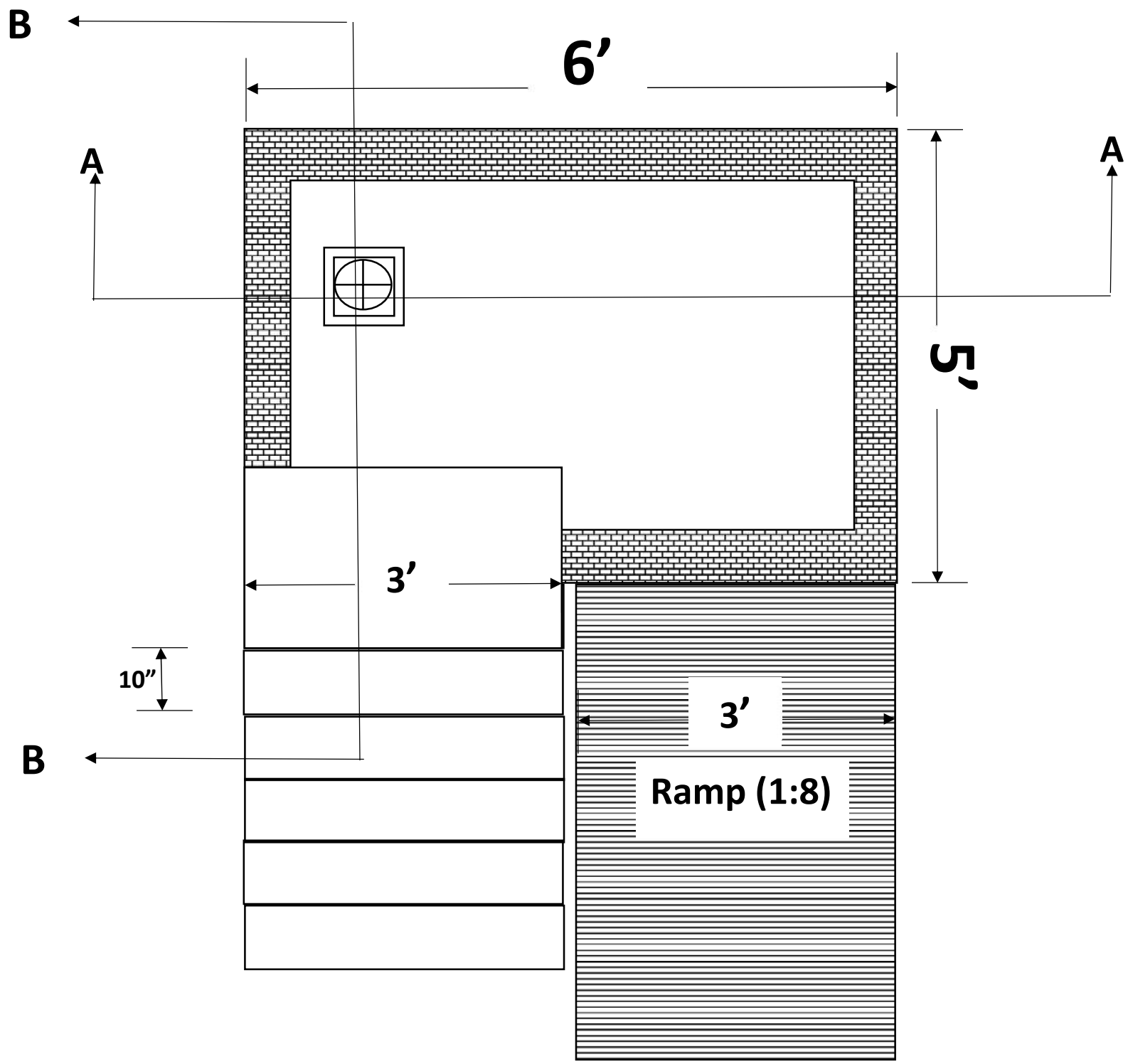
B
6’
A
A
5’
3’
10”
3’
B
Ramp (1:8)

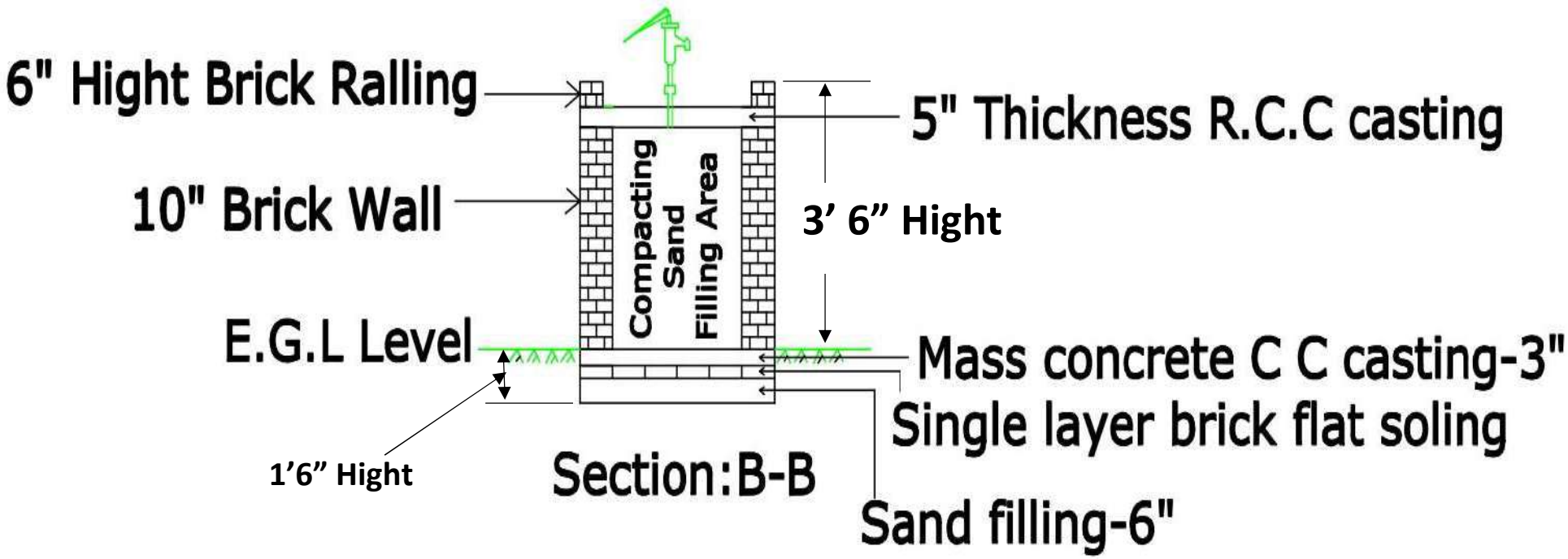
6" Hight Brick Ralling
10" Brick Wall
E.G.L Level
1'6" Hight
Compacting Sand Filling Area
5" Thickness R.C.C casting
3' 6" Hight
Mass concrete C C casting-3"
Single layer brick flat soling
Sand filling-6"
Section:B-B

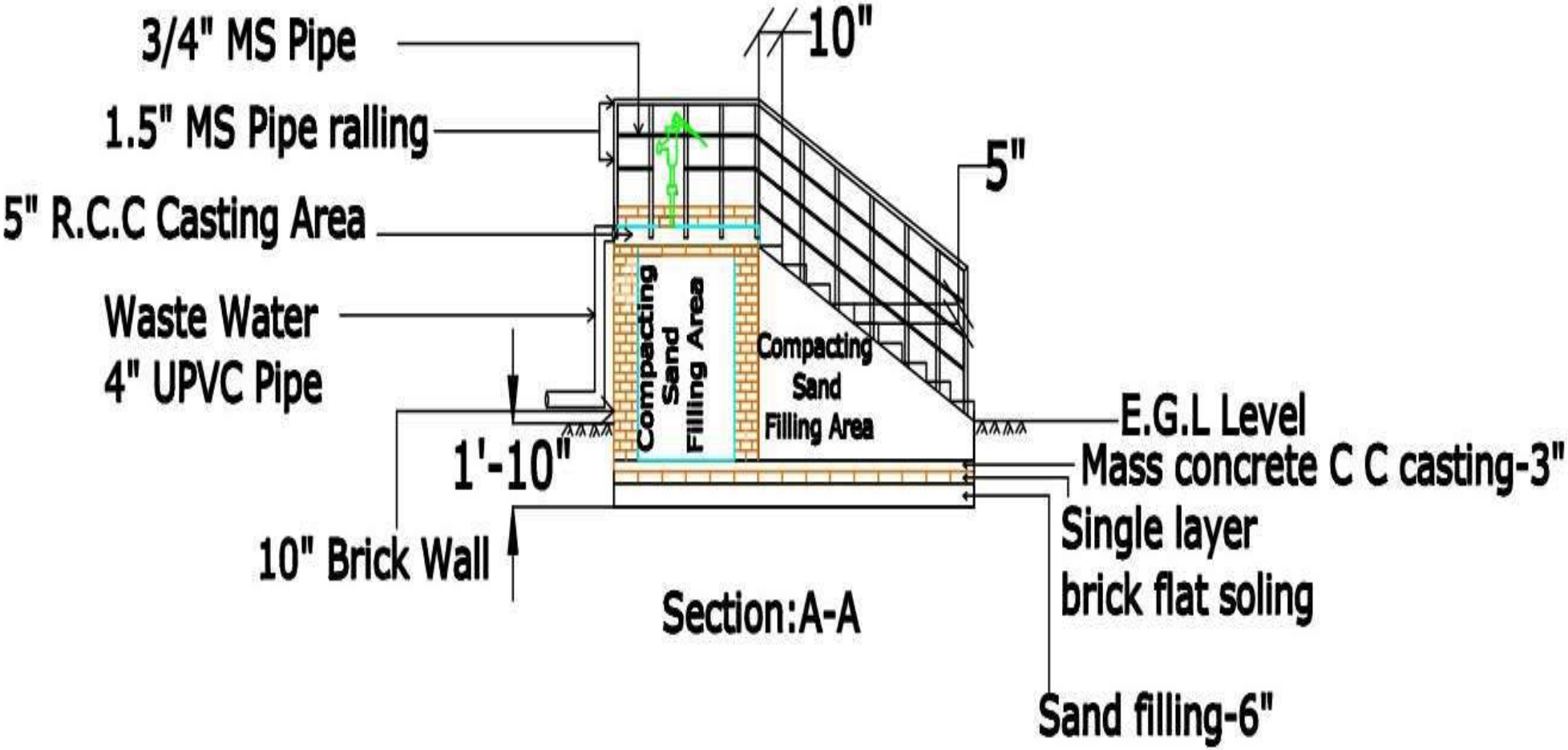
3/4" MS Pipe
1.5" MS Pipe ralling
5" R.C.C Casting Area
Waste Water
4" UPVC Pipe
10"
5"
Compacting Sand Filling Area
Compacting Sand Filling Area
E.G.L Level
Mass concrete C C casting-3"
Single layer
brick flat soling
Sand filling-6"
1'-10"
10" Brick Wall
Section:A-A